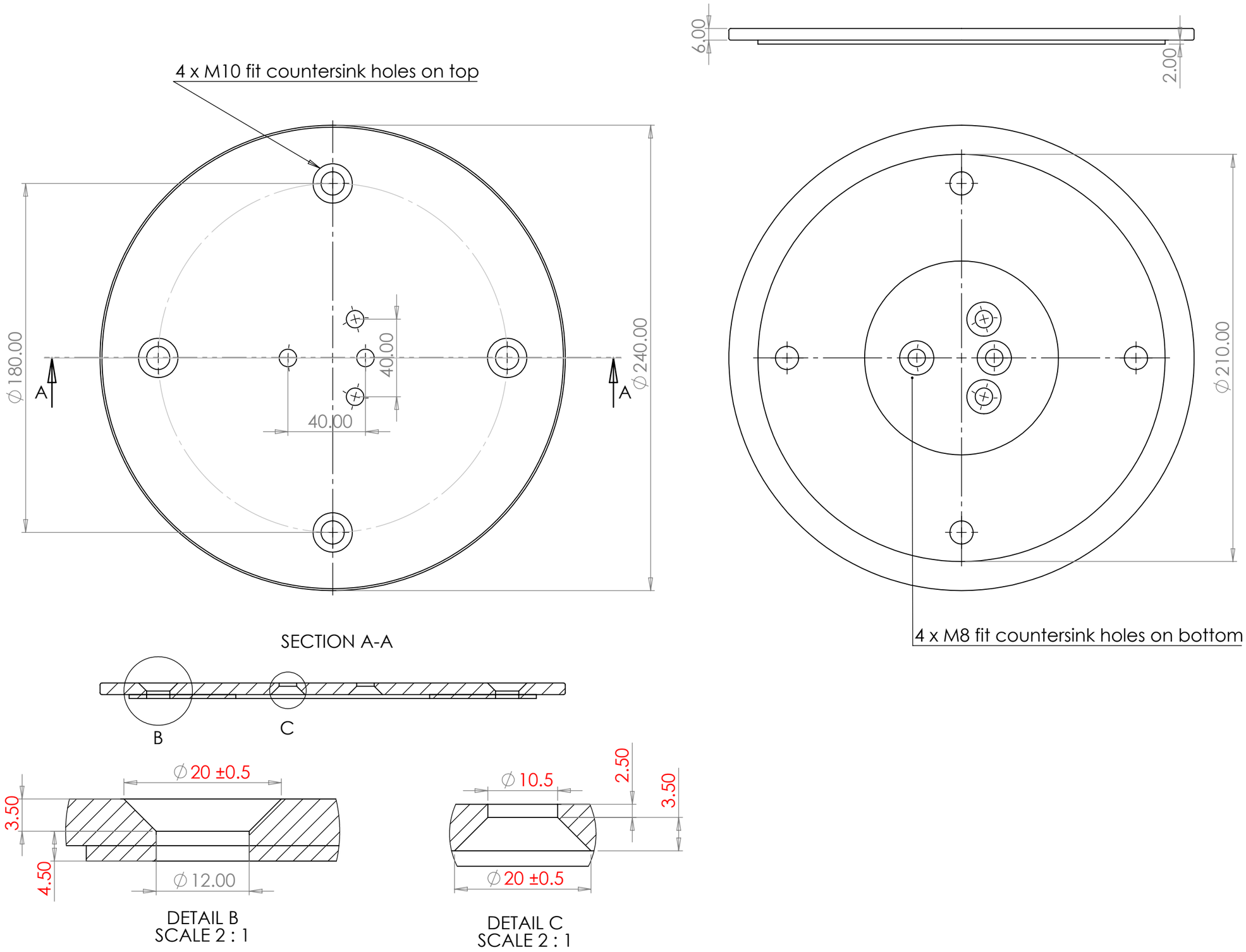

PROPRIETARY RIGHTS ARE INCLUDED IN THE INFORMATION DISCLOSED HEREIN. NEITHER THIS DOCUMENT NOR ANY INFORMATION DISCLOSED SHALL BE REPRODUCED, USED, TRANSFERRED TO OTHER DOCUMENTS, OR DISCLOSED TO OTHERS FOR ANY PURPOSE INCLUDING MANUFACTURING UNLESS SPECIFICALLY AUTHORISED AND ONLY THEN ON CONDITION THAT THIS NOTICE APPEARS ON ANY REPRODUCTION. ALSO ALL RIGHTS FOR MANUFACTURE AND/OR SALE SHALL REMAIN THE PROPERTY OF GLOBAL CHAIR COMPONENTS.

This is an uncontrolled drawing.

UNLESS OTHERWISE SPECIFIED:
DIMENSIONS ARE IN MILLIMETERS
TOLERANCES:
X.X: ±1.0

DRAWN:		
CHECKED:		
APPROVED:		

NOTES:

Global Chair Components,
Unit 1, Global Court,
Reydon,
IP18 6SY
Tel: 01502 723072
sales@globalchair.com

CUSTOMER/PROJECT:

DESCRIPTION:

MATERIAL:
FINISH:
WEIGHT (Kg):

SHEET SCALE: 1:2 | SHEET SIZE: A3 | SHEET NUMBER: 1 OF 1

DWG NO: Floor fix base

REVISON: 1